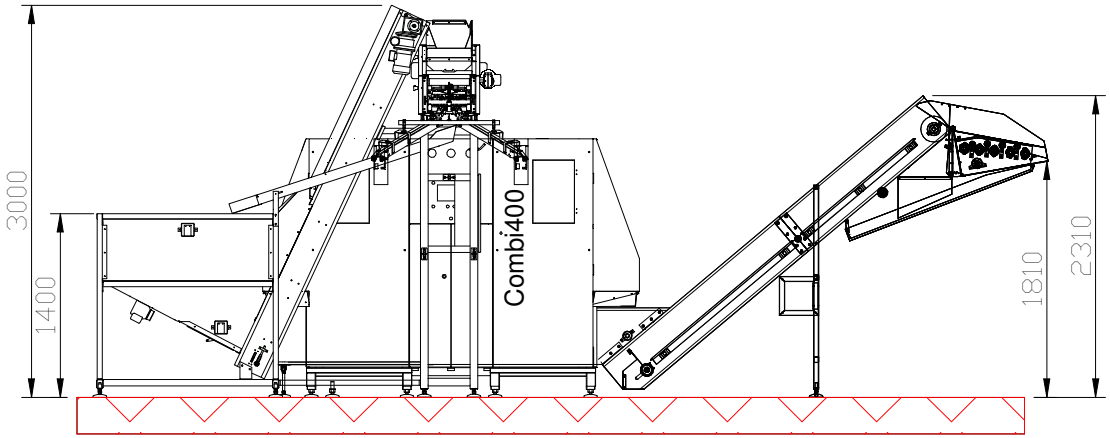
3000
1400
Combi400
1810
2310

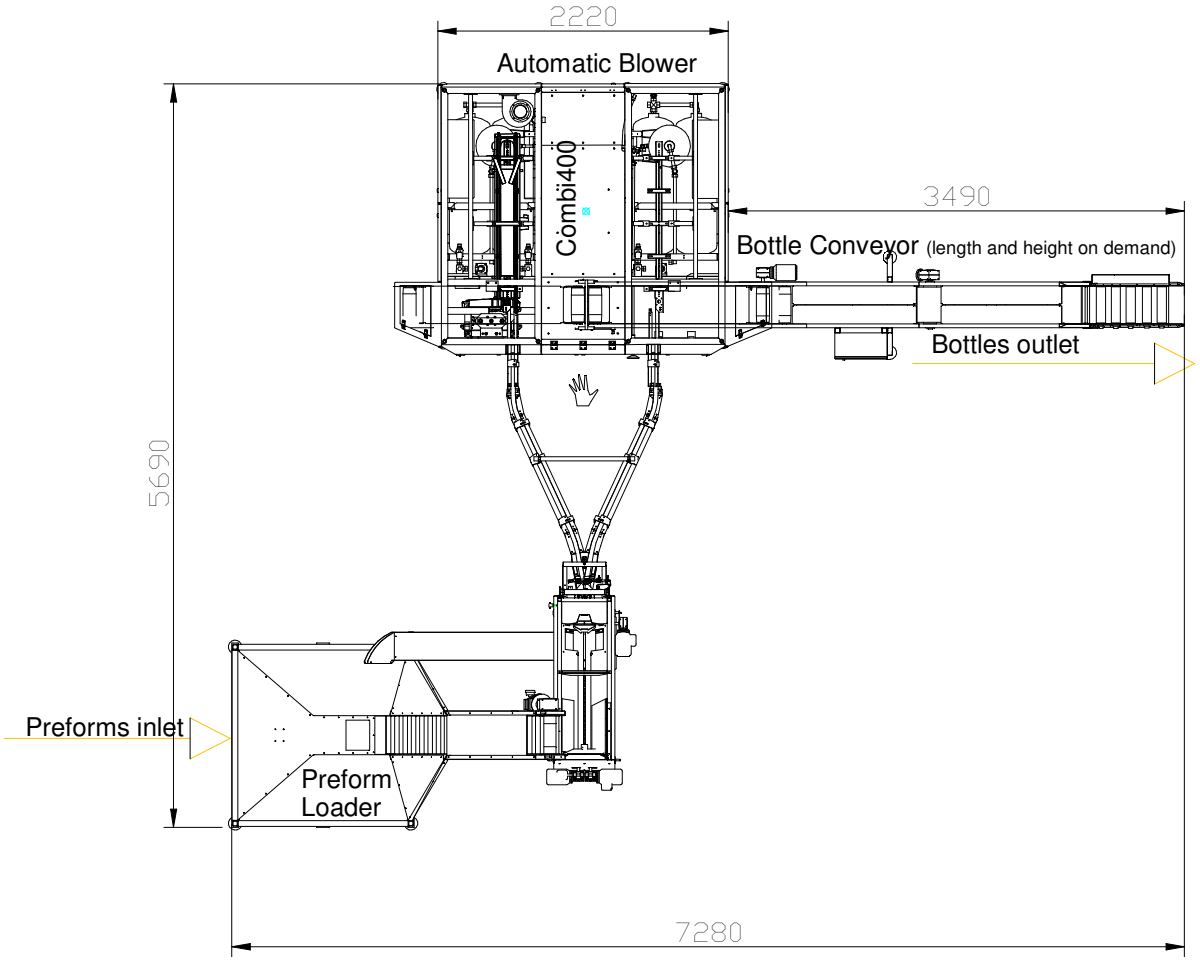
2220
Automatic Blower
Combi400
3490
Bottle Conveyor (length and height on demand)
Bottles outlet
5690
Preforms inlet
Preform
Loader
7280

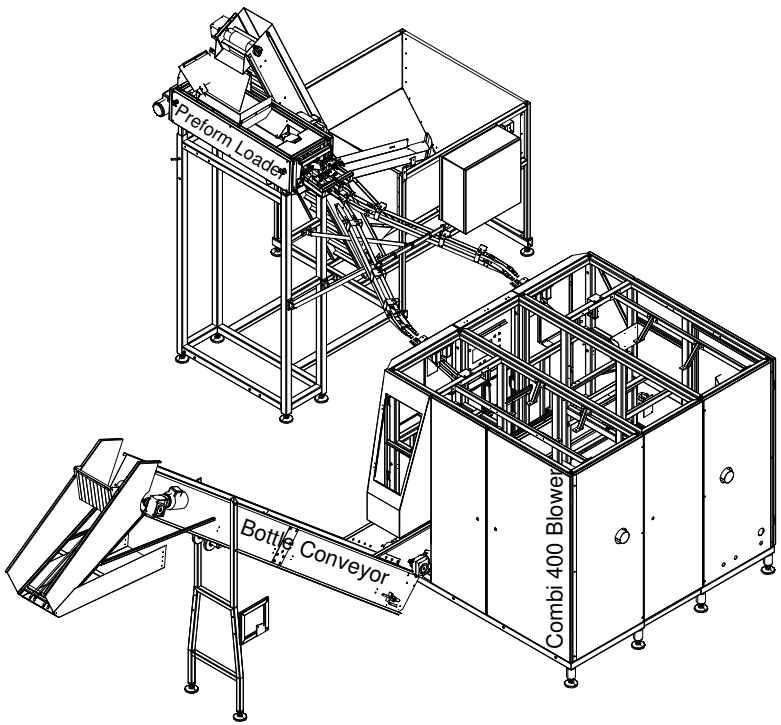
Preform Loader
Bottle Conveyor
Combi 400 Blower